C.I.P.	7,65 mm Browning Country of Origin: BE	TAB.	IV
		Date	84-06-14
		Revision	08-09-23

Alternative Names: 32 Auto(matic), 32 ACP

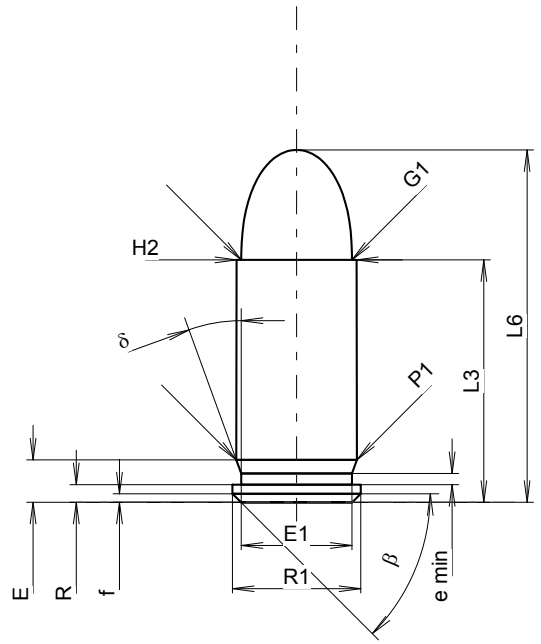

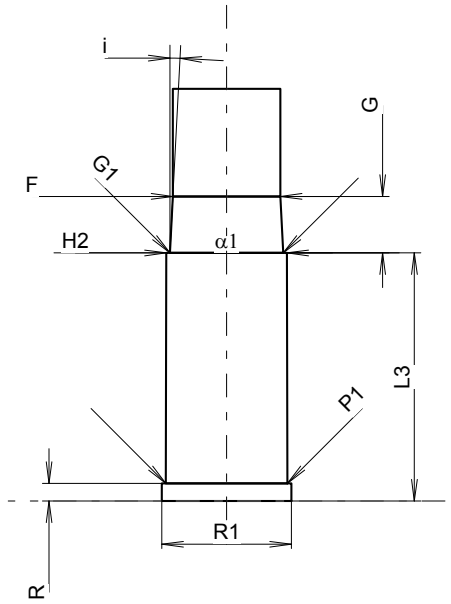

Scale 1.86:1

CARTRIDGE MAXI

Lengths

L1	=		
L2	=		
L3 1)	=	17.20	
L4	=		
L5	=		
L6	=	25.00	

Case Head

R 1)	=	1.25	-0.25
R1	=	9.10	
R3	=		
E	=	3.01	
E1	=	7.85	
e min	=	0.80	
δ	=	20°	
f	=	0.60	
β	=	45°	

Powder Chamber

P1	=	8.55
P2	=	

Junction Cone

α	=	
S	=	
r1 min	=	
r2	=	

Collar

H1	=	
H2 1)	=	8.52

Projectile

G1 1)	=	7.85
G2	=	
F	=	
L3+G 1)	=	21.21

Pressures (Energies)
Method Transducer

Pmax	=	1600	bar
PK	=	1840	bar
PE	=	2080	bar
M	=	10.50	

Miscellaneous Dimensions

Fe 1)4)	=	0.30
delta L	=	

CHAMBER MINI

Lengths

L1	=	
L2	=	
L3 1)	=	17.60

Breech

R 1)	=	1.25
R1	=	9.20
R2	=	
R3	=	
r	=	

Powder Chamber

E	=	
P1 1)	=	8.62
P2	=	

Junction Cone

α	=	
S	=	
r1 max	=	
r2	=	

Collar

H1	=	
H2 1)	=	8.55

Commencement of Rifling

G1 1)*	=	8.05	
G 1)*	=	4.01	
α1	=	180°	
h	=		
s	=		
i 1)	=	2°59'52"	
w	=		

Barrel

F 1)*	=	7.63	
Z 1)	=	7.83	

Grooves

b	=	2.69	
N	=	6	
u	=	250.00	
Q	=	47.37	mm²

Dimensions in << mm >>
Dimensions and Tolerances for Proof Barrels
see Appendix CR 1.

Notes:
1) Check for safety reasons
4) Headspace on Rim
* Basic dimensions